User Manual

Model: Breezy Trace (SKU: BTC01)

With Bluetooth® Wireless Technology

Manufacturer and Contact Information

Manufacturer: Breezy Med

Address: 317 Commercial Street NE
Albuquerque, NM 87102

For product information, sales, service, and technical support:

https://breezymed.com/
Customer Support Phone: (833) 273-3991
Email: info@breezymed.com

This manual covers model: Breezy Trace (BTC01)

Environmental Considerations

This section provides information about the environmental impact of the product.

Product End-of-Life Handling

Observe the following guidelines when recycling an instrument or component:

Equipment recycling. *Production of this device required the extraction and use of natural resources. The device may contain substances that could be harmful to the environment or human health if improperly handled at the product's end of life. To avoid the release of such substances into the environment and to reduce the use of natural resources, we encourage you to recycle this product in an appropriate system that will ensure that most of the materials are reused or recycled appropriately. It is recommended that this device be taken to a certified Waste Electrical and Electronic Equipment recycler.*

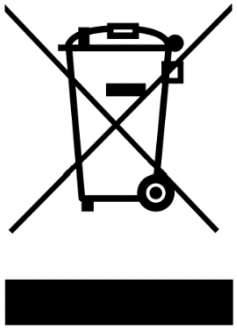

Do not throw in trash at end of product life.

Contents

Manufacturer and Contact Information 2
Environmental Considerations 3
General Information 5
Service Information 6
Before Unpacking 6
Contents Included: 6
Product Overview 7
Getting Started 8
Auto QA – use to collect data from all Breezy Traces 8
Custom QA – use to select Traces and optionally name their locations 8
Breezy Trace additional information 10
Evaluating Trace data 11
Using Trace data to adjust fogging conditions 13
Battery Replacement 13
Regulatory information 14
LIMITED WARRANTY (USA/CANADA) 15

Keep this user manual in a readily accessible location

General Information

Breezy Trace™ extends the capabilities of Breezy Blue™ by measuring and recording hydrogen peroxide concentration, relative humidity, and temperature throughout each treatment cycle. These calibrated monitoring devices integrate with Breezy Blue and Breezy Cloud™ to provide objective data for assessing treatment conditions, evaluating cycle consistency, and supporting quality assurance activities across critical spaces.

Breezy Cloud uses Trace measurements to calculate cumulative hydrogen peroxide exposure and, where applicable, generate a predicted Bacillus atrophaeus spore log-reduction classification based on Breezy Med validation testing. Infection prevention and EVS teams can use these data to support protocol development, routine quality assurance, documentation, and accreditation readiness.

By making treatment conditions measurable and documented, Breezy Trace helps healthcare facilities confirm that cycles are performed within their intended operating parameters. Predicted log-reduction results are quality-assurance indicators based on Breezy Med validation data and are not direct measurements of microbial reduction during an individual room treatment.

Item	**Specification**
SKU	*BTC01*
Wireless protocol	*Bluetooth® LE*
Size	*4.1 in x 2.9 in x 1.8 in*
Weight	*6.8 oz (192.8 g)*
Hydrogen Peroxide (H_2O_2) Range	*0-200 ppm*
Hydrogen Peroxide (H_2O_2) accuracy (30–90 ppm / 70-80°F / 50–75% RH)	*Maximum deviation: 18% of the reference reading from Dräger X-node device*
Calibration interval (sensor expiration)	*1 year from first use*
Other environmental sensors	*Temperature and Relative Humidity*
Operating temperature range	*50° F to 90° F (10° C to 32° C)*
Operating humidity range	*0 to 95% relative humidity, non-condensing*
Battery	*Energizer Ultimate Lithium L91 (X3), replaceable*
Battery life – turned off when not in use	*~ 256 fogging events (30 minute sampling)*
Breezy Trace location - operating distance	*Within 40 feet of Breezy Smart Controller during fogging*
Max number of Breezy Traces per fogging event	*8*
Required equipment for data integration	*Breezy Smart Controller (Gen 2), Breezy Cloud*
QA classification	*predicted log reduction of Bacillus atrophaeus (ATCC 9372) spores based on Breezy Med testing*

Service Information

The product contains no serviceable parts other than replacement of AA batteries. It should not be disassembled, repaired, or modified beyond replacing the batteries by anyone other than the manufacturer or approved technicians.

Before Unpacking

Inspect the package carton for external damage. If the carton is damaged, notify the carrier.

Remove the device from its package and check that it has not been damaged in transit. Verify that the carton contains the device and contents listed below.

Contents Included:

1x Breezy Trace
1x Trace Base (for mounting on Breezy Buggy)
2x Screws (for mounting on Breezy Buggy)

Product Overview

Breezy Trace uses an LED indicator to communicate the device's status.

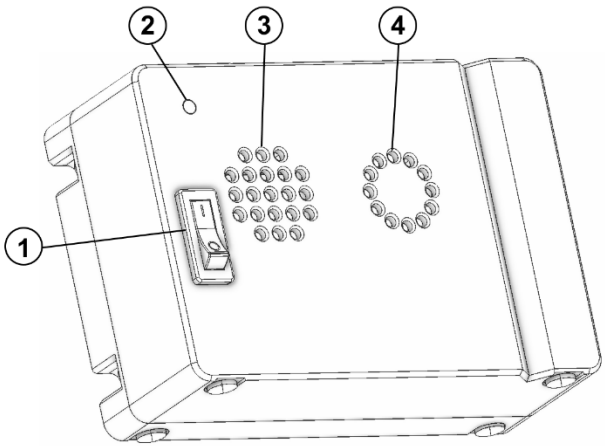

1. *Power Switch*
2. *Device Status Indicator*
3. *Air intake*
4. *Air Exhaust*

Note: The airflow around the device must be unobstructed, avoid mounting or placing the device where the intake or exhaust ports will be obstructed.

Device Status Indicator - blinking

🟢 = *Device ready*
🔵 = *Device sampling fog event*
🟦 = *Device Initializing*
🔴 = *Low Battery*
🟣 = *Device Error*

Getting Started

- *Up to 8 Breezy Traces can be used during a fog event.*
- *Remove Battery insulator pull tab if installed*

Auto QA – use to collect data from all Breezy Traces

- *Place Breezy Trace(s) in the Trace base on Breezy Buggy or elsewhere in room to be fogged and power on Breezy Trace(s).*
- *Device Status indicator will blink green when ready.*
- *Use a Smart Controller to connect to Breezy Blue.*
- *All Breezy Traces that are powered and within range will be added to the fog event.*
- *If the number of Breezy Traces Nearby shown on the fogging screen is correct, the area is ready to be fogged.*

- *Using the smart controller mounted on Breezy Buggy, fog the room with the appropriate protocol.*
- *Leave the controller mounted on Breezy Buggy or Breezy Holster with the screen turned on during fogging and settling.*
- *Power off Breezy Trace after the settling time has completed.*
- *Note: prematurely powering off the smart controller or Breezy Trace before the settling time has ended will truncate the accumulated exposure used for the QA prediction.*

Custom QA – use to select Traces and optionally name their locations

- *Power on Breezy Trace.*
- *Device Status indicator will blink green when ready.*
- *Place Breezy Trace(s) in room to be fogged.*
- *Use a Smart Controller to connect to Breezy Blue.*
- *Press the icon on the fogging screen*
- *Tap* **Custom QA**

- *Press **+** to add all the Traces to be used during the fog event and name them with their locations using the drop-down list or text entry (naming is optional)*

- *Press the back arrow*
- *Fog the room with the appropriate protocol.*
- *Leave the controller mounted on Breezy Buggy or Breezy Holster with the screen turned on during fogging and settling.*
- *Power off Breezy Trace after settling time has completed.*
- *Note: prematurely powering off the smart controller or Breezy Trace before the settling time has ended will truncate the accumulated exposure used for the QA prediction.*

Breezy Trace additional information

- *Press the back arrow until the Models screen is shown*
- *Press the Breezy Trace button*

- *Traces that are currently seen by the controller and Traces that previously had been seen by the controller are shown.*
- *Each device specifies an H_2O_2 sensor expiration date. Breezy Trace should be sent back to Breezy Med by this date for calibration. The calibration is valid for 1 year from the date of first use (the date a Smart Controller first sees the Trace).*
- *Expired Traces used for QA events will display results on Breezy Cloud but will be flagged with a warning symbol. An expired sensor should not be relied upon for QA decisions.*
- *If the Trace is in sampling mode (initiated by a Breezy Blue fogging countdown), the live sensor data will be shown on this screen*

Evaluating Trace data

- *Navigate to https://cloud.breezymed.com/*
- *Press VIEW LOGS button on home screen*

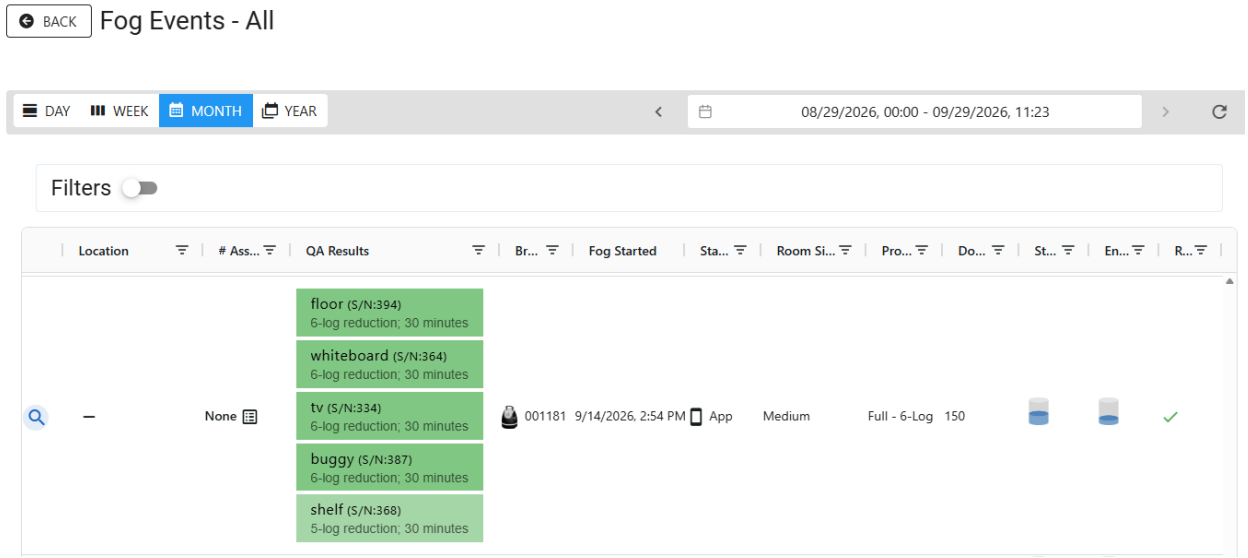

- *If Breezy Trace data is available for a fog event, it will be shown in the QA results column*
- *Predicted log reduction shown in the QA results is not a direct measurement of microbial reduction in the treated room. It is a prediction based on the relationship established during Breezy Med validation testing using B. atrophaeus (ATCC 9372) biological indicators under the validated test conditions.*
- *The predicted log-reduction classification is calculated using the Breezy Trace data accumulated up to the time the Smart Controller or Breezy Trace were switched OFF, or for a maximum of 30 minutes.*

- *Press 🔍 to view detailed data from a specific fog event*

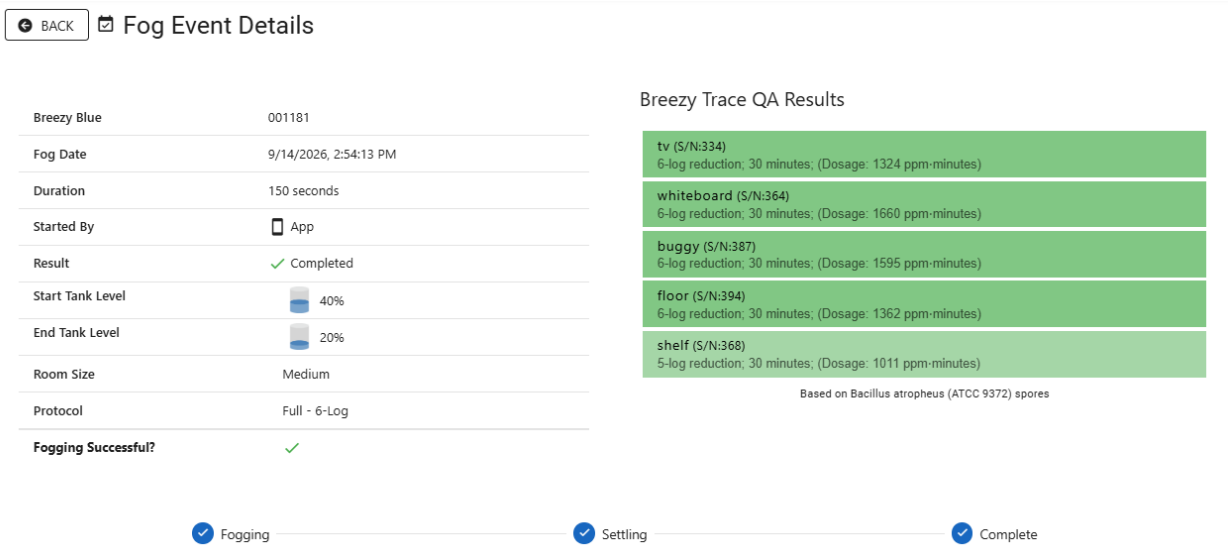

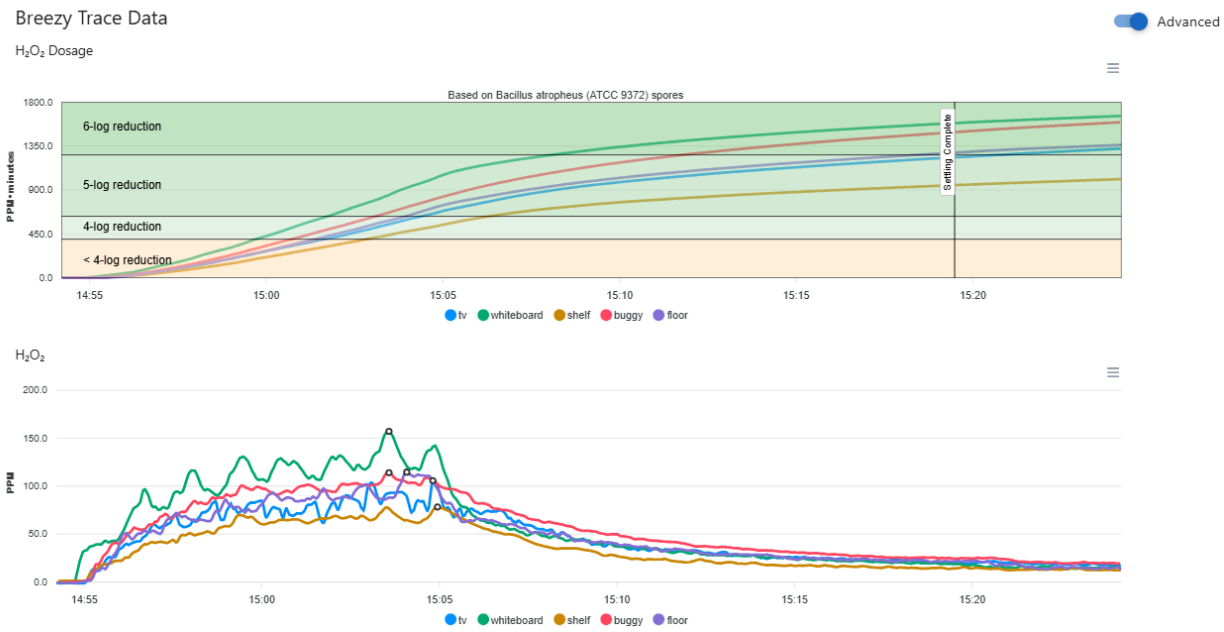

If the Advanced toggle is enabled, the data taken during the fog event is shown. The cumulative H_2O_2 dosage and corresponding predicted log-reduction thresholds can be seen in the graphs.

Using Trace data to adjust fogging conditions

- *If the predicted QA classification does not meet the target:*
    - *Where permitted by facility procedures, turn OFF the HVAC system or cover return air vents during fogging if the dosage fails to reach acceptable levels. Do not obstruct HVAC where prohibited or unsafe.*
    - *Reposition the Breezy Blue to ensure the fog is able to circulate in the room*
    - *Verify Breezy Blue fogging protocol is appropriate for size of room being treated.*

Battery Replacement

Note*: Use only Energizer Ultimate Lithium Batteries (L91)*

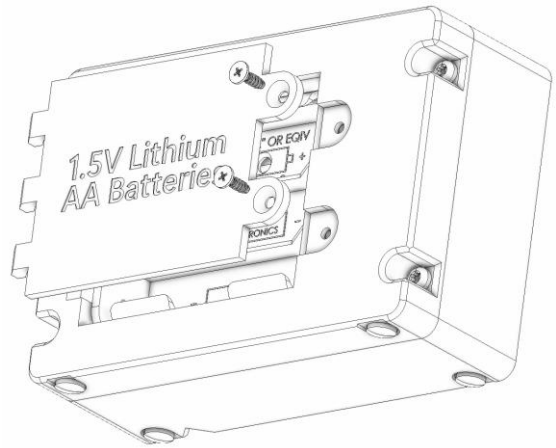

- *Remove the rear cover by unscrewing the two PH1 cross head screws.*
- *Remove the depleted 3 x AA batteries from Breezy Trace and discard appropriately.*
- *Install three new Energizer Ultimate Lithium batteries in the proper orientation by following the markings in the battery holder.*
- *Replace the rear cover and re-install the two PH1 cross head screws.*

Regulatory information

Contains FCC ID: QOQ-GM220P

This device complies with part 15 of the FCC Rules. Operation is subject to the following two conditions:

(1) This device may not cause harmful interference, and

(2) this device must accept any interference received, including interference that may cause undesired operation.

Class B device notice. NOTE: This equipment has been tested and found to comply with the limits for a Class B digital device, pursuant to part 15 of the FCC Rules. These limits are designed to provide reasonable protection against harmful interference in a residential installation. This equipment generates, uses, and can radiate radio frequency energy and, if not installed and used in accordance with the instructions, may cause harmful interference to radio communications. However, there is no guarantee that interference will not occur in a particular installation. If this equipment does cause harmful interference to radio or television reception, which can be determined by turning the equipment off and on, the user is encouraged to try to correct the interference by one or more of the following measures:

- *Reorient or relocate the receiving antenna.*
- *Increase the separation between the equipment and receiver.*
- *Consult the dealer or an experienced radio/TV technician for help.*

RF exposure safety. This product is a radio transmitter and receiver. It is designed not to exceed the emission limits for exposure to radio frequency (RF) energy set by the Federal Communications Commission. The antenna must be installed and operated with a minimum distance of 20 cm between the radiator and your body. This transmitter must not be co-located or operating in conjunction with any other antenna or transmitter.

LIMITED WARRANTY (USA/CANADA)

Breezy Med warrants that this product will be free from defects in materials and workmanship for a period of one (1) year from the date of shipment. If any such product proves defective during this warranty period, Breezy Med, at its option, either will repair the defective product without charge for parts and labor, or will provide a replacement in exchange for the defective product. Parts, modules and replacement products used by Breezy Med for warranty work may be new or reconditioned to like new performance. All replaced parts, modules and products become the property of Breezy Med.

In order to obtain service under this warranty, Customer must notify Breezy Med of the defect before the expiration of the warranty period and make suitable arrangements for the performance of service. Customer shall be responsible for packaging and shipping the defective product to the service center designated by Breezy Med, with shipping charges prepaid. Breezy Med shall pay for the return of the product to Customer if the shipment is to a location within the country in which the Breezy Med service center is located. Customer shall be responsible for paying all shipping charges, duties, taxes, and any other charges for products returned to any other locations.

This warranty shall not apply to any defect, failure or damage caused by improper use or improper or inadequate maintenance and care. Breezy Med shall not be obligated to furnish service under this warranty a) to repair damage resulting from attempts by personnel other than Breezy Med representatives to install, repair or service the product; b) to repair damage resulting from improper use or connection to incompatible equipment; c) to repair any damage or malfunction caused by the use of non-Breezy Med supplies; or d) to service a product that has been modified or integrated with other products.

THIS WARRANTY IS GIVEN BY BREEZY MED WITH RESPECT TO THE PRODUCT IN LIEU OF ANY OTHER WARRANTIES, EXPRESS OR IMPLIED. BREEZY MED AND ITS VENDORS DISCLAIM ANY IMPLIED WARRANTIES OF MERCHANTABILITY OR FITNESS FOR A PARTICULAR PURPOSE. BREEZY MED'S RESPONSIBILITY TO REPAIR OR REPLACE DEFECTIVE PRODUCTS IS THE SOLE AND EXCLUSIVE REMEDY PROVIDED TO THE CUSTOMER FOR BREACH OF THIS WARRANTY. BREEZY MED AND ITS VENDORS WILL NOT BE LIABLE FOR ANY INDIRECT, SPECIAL, INCIDENTAL, OR CONSEQUENTIAL DAMAGES IRRESPECTIVE OF WHETHER BREEZY MED OR THE VENDOR HAS ADVANCE NOTICE OF THE POSSIBILITY OF SUCH DAMAGES.